Summary in Graph

Exam Summary (GATE Overflow CS Test Series 2026 | Mock GATE 5)

Qs. Attempted:	0 (0 + 0)
Correct Attempts:	0 (0 + 0)
Incorrect Attempts:	0 (0 + 0)
Correct Marks:	0 (0 + 0)
Penalty Marks:	0 (0 + 0)
Resultant Marks:	0 (0 + 0)

Total Questions:	65 (30 + 35)
Total Marks:	100 (30 + 70)
Exam Duration:	180 Minutes
Time Taken:	0 Minutes

Individual Question Statistics

Select Metric: Marks Obtained

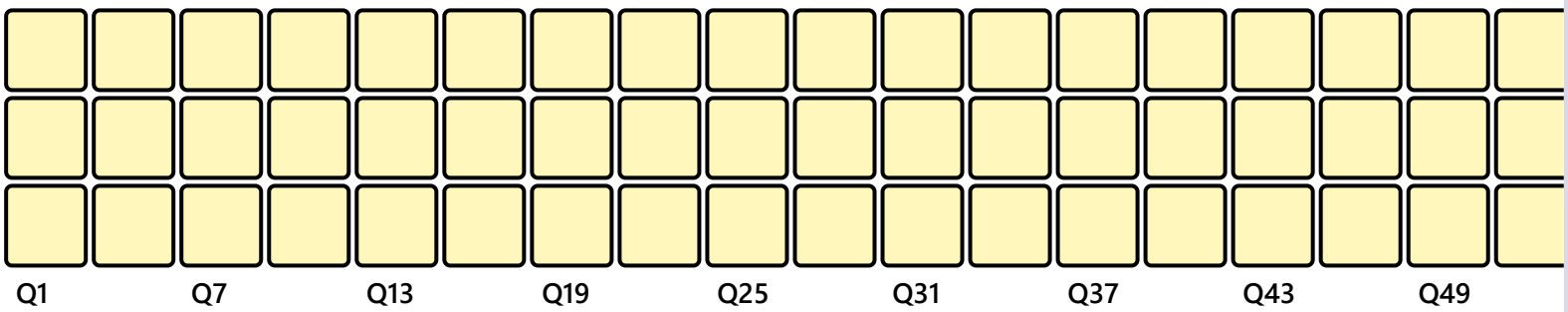

* Average Stats based on first-attempt stats of Top 10% (5) out of 48 users

EXAM RESPONSE | EXAM STATS | FEEDBACK

Aptitude

Q #1 | Multiple Choice Type | Award: 1 | Penalty: 0.33 | Verbal Aptitude

The guilty convict looked sheepish.

Which of the following does the underlined word NOT mean?

A. jubilant
B. ashamed

C. uncomfortable
D. embarrassed

Your Answer: | Correct Answer: A | Not Attempted | Time taken: 00min 00sec | Discuss

Q #2 | Numerical Type | Award: 1 | Penalty: 0 | Spatial Aptitude

The minimum number of shapes of the given figure that must be shaded so that at least $\frac{3}{5}$ of the figure is shaded is _____

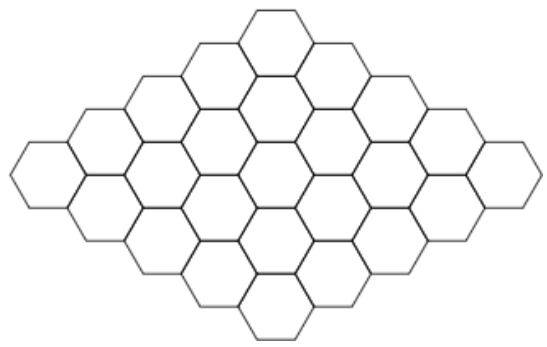

Your Answer: | Correct Answer: 15 | Not Attempted | Time taken: 00min 00sec | Discuss

Q #3 | Multiple Choice Type | Award: 1 | Penalty: 0.33 | Quantitative Aptitude

The average performance of the students were poor in an examination and the organizing committee decided to give extra marks of 5 to everyone. Which of the following statistical measures will not change even after the extra marks are given?

A. Mode
B. Median
C. Mean
D. Standard deviation

Your Answer: | Correct Answer: D | Not Attempted | Time taken: 00min 18sec | Discuss

Q #4 | Numerical Type | Award: 1 | Penalty: 0 | Quantitative Aptitude

Marks of 6 different students for 5 subjects in an examination are given. All the marks given are out of 100.

Student	Programming	Algorithm	Database	Mathematics	Operating System
Anjana	80	84	89	87	52
Pooja	78	74	67	68	56
Shivani	98	64	58	47	77
Mamta	74	67	86	75	98
Sonam	65	73	58	83	92
Reena	95	83	62	58	84

The number of students who scored overall more than $75\,\%$ marks in the examination is _____

Your Answer: | Correct Answer: 3 | Not Attempted | Time taken: 00min 00sec | Discuss

Q #5 | Numerical Type | Award: 1 | Penalty: 0 | Quantitative Aptitude

The average of 9999 numbers is 9999. From these numbers Ravi choose 7299 numbers and coincidentally, their average is 7299. The average of the remaining numbers is _____

Your Answer: | Correct Answer: 17298 | Not Attempted | Time taken: 00min 00sec | Discuss

Q #6 | Multiple Choice Type | Award: 2 | Penalty: 0.67 | Analytical Aptitude

There is a cat and three girls. The cat is in exactly one of the girl's house and exactly one of the following statements told by the three girls is TRUE.

- $\text{Girl } 1$: The cat is in my house.
- $\text{Girl } 2$: The cat is not in my house.
- $\text{Girl } 3$: The cat is not in Girl $1's$ house.

Which Girl's house contains the cat?

A. Girl 1
B. Girl 2
C. Girl 3
D. None of them

Your Answer: | Correct Answer: B | Not Attempted | Time taken: 00min 00sec | Discuss

Q #7 | Numerical Type | Award: 2 | Penalty: 0 | Spatial Aptitude

The image of the point $P(3, -4)$ by the line mirror $y = -x$ is the point Q and the image of Q by the line mirror $x = 0$ is the point $R(\alpha, \beta)$. The value of $\alpha + \beta$ is _____

Your Answer: | Correct Answer: -7 | Not Attempted | Time taken: 00min 00sec | Discuss

Q #8 | Multiple Select Type | Award: 2 | Penalty: 0 | Verbal Aptitude

The question consist of two words which have a certain relationship to each other followed by four pairs of related words. Select the pair which has the same relationship. (Mark all the appropriate choices)

Traduce : Malign ::

A. Heist : Theft
B. Endorse : Disapprove
C. Succumb : Surrender
D. Divergent : Disparate

Your Answer: | Correct Answer: A;C;D | Not Attempted | Time taken: 00min 00sec | Discuss

Q #9 | Numerical Type | Award: 2 | Penalty: 0 | Quantitative Aptitude

A parallelogram $PQRS$ has vertex $P = (0, 3)$. The midpoints of sides $\overline{PQ}$ and $\overline{QR}$ are $X = (-3, 0)$ and $Y = (6, -3)$, respectively and the coordinates of vertex $S = (\alpha, \beta)$. The value of $\alpha - \beta =$_____

Your Answer: | Correct Answer: 21 | Not Attempted | Time taken: 00min 00sec | Discuss

Q #10 | Multiple Choice Type | Award: 2 | Penalty: 0.67 | Quantitative Aptitude

The least number of complete years in which a sum of money put out at 5% compound interest will be at least tripled is _____

A. 22 years
B. 24 years
C. 25 years
D. 23 years

Your Answer: | Correct Answer: D | Not Attempted | Time taken: 00min 00sec | Discuss

Technical

Q #1 | Multiple Select Type | Award: 1 | Penalty: 0 | Databases

Which of the following statements is/are correct? (Mark all the appropriate choices)

A. With strict $2PL$, transactions can be serialized in the order in which they commit.
B. With rigorous $2PL$, transactions can not be always serialized in the order in which they commit.
C. With strict $2PL$, only exclusive locks are held until the end of the transaction.
D. With rigorous $2PL$, both shared and exclusive locks are held until the end of the transaction.

Your Answer: | Correct Answer: C;D | Not Attempted | Time taken: 00min 00sec | Discuss

Q #2 | Numerical Type | Award: 1 | Penalty: 0 | Digital Logic

The number of clock pulses needed to change the contents of a $5-$bit up counter from 10101 to 00101 is _____

Your Answer: | Correct Answer: 16 | Not Attempted | Time taken: 00min 00sec | Discuss

Q #3 | Multiple Choice Type | Award: 1 | Penalty: 0.33 | Set Theory & Algebra

Which of the following is/are correct? ("/" is the "divides" relation)

- $S_1 : [\{1, 2, 3, 8, 12, 24, 36, 72\}, \ /]$ is a lattice.
- $S_2 : [\{1, 2, 4, 8, 16, 32\}, \ /]$ is a lattice.

A. Only S_1
B. Only S_2
C. Both S_1 and S_2
D. None of the above

Your Answer: | Correct Answer: C | Not Attempted | Time taken: 00min 00sec | Discuss

Q #4 | Multiple Select Type | Award: 1 | Penalty: 0 | Digital Logic

Professor Vijay was playing with floating point representation and he used IEEE-754 single precision representation for 4 byte integers as both takes 4 bytes of memory. For which of the following numerical values can he expect to get an output difference due to the datatype change? (Mark all the appropriate choices)

A. $-2^{24}+1$
B. -2^{30}
C. $2^{30}-1$
D. $2^{20}-1$

Your Answer: | Correct Answer: C | Not Attempted | Time taken: 00min 00sec | Discuss

Q #5 | Numerical Type | Award: 1 | Penalty: 0 | CO & Architecture

Consider a CPU where all the instructions require 4 clock cycles to complete execution. There are 300 instructions in the instruction set. It is found that 164 control signals are needed to be generated by the control unit. While designing the horizontal microprogrammed control unit, single address field format is used for branch control logic. If the minimum size in bits of the control word required is α and that of control address register is β, $\alpha+\beta=$ _____

Your Answer: | Correct Answer: 186 | Not Attempted | Time taken: 00min 00sec | Discuss

Q #6 | Multiple Choice Type | Award: 1 | Penalty: 0.33 | Digital Logic

Which of the following is the correct way to represent a signed decimal number in $2's$ complement representation as a sum of powers of 2?

A. $(b_{n-1}b_{n-2}\ldots b_2b_1b_0)_2 \equiv \sum_{i=0}^{n-1} b_i 2^i$

B. $(b_{n-1}b_{n-2}\ldots b_2b_1b_0)_2 \equiv -b_{n-1}2^{n-1} + \sum_{i=0}^{n-2} b_i 2^i$

C. $(b_{n-1}b_{n-2}\ldots b_2b_1b_0)_2 \equiv -b_{n-1}2^{n-1} + \sum_{i=0}^{n-1} b_i 2^i$

D. $(b_{n-1}b_{n-2}\ldots b_2b_1b_0)_2 \equiv -b_{n-1}2^{n} + \sum_{i=0}^{n-2} b_i 2^i$

Your Answer: | Correct Answer: B | Not Attempted | Time taken: 00min 00sec | Discuss

Q #7 | Multiple Select Type | Award: 1 | Penalty: 0 | Compiler Design

Which of the following sentences regarding Viable prefixes is/are CORRECT? (Mark all the appropriate choices)

A. Viable prefixes are used in predictive parsing.
B. Viable prefixes are the set of prefixes of right-sentential forms that do not extend past the end of the right-most handle.
C. Set of all viable prefixes for a sentence forms a regular language.
D. Viable prefixes have prefix-free property (no string is a prefix of any other string).

Your Answer: | Correct Answer: B;C | Not Attempted | Time taken: 00min 00sec | Discuss

Q #8 Numerical Type | Award: 1 | Penalty: 0 | Digital Logic

A 8-bit ripple counter consists of flip-flops, which each have a propagation delay from clock to Q output of $19\ \text{ns}$. For the counter to recycle from 11111111 to 00000000, it takes a total of _____ (nanoseconds).

Your Answer: | Correct Answer: 152 | Not Attempted | Time taken: 00min 00sec | Discuss

Q #9 Multiple Choice Type | Award: 1 | Penalty: 0.33 | Computer Networks

Ethernet is said to be non-deterministic because

A. It is not possible to determine how long it will take to get a frame from one device to another.
B. It is not possible to determine whether an error has occurred during the transmission of a frame.
C. It is not possible to determine if another device wishes to transmit.
D. It is not possible to determine the maximum time a device will have to wait to transmit.

Your Answer: | Correct Answer: D | Not Attempted | Time taken: 00min 00sec | Discuss

Q #10 Multiple Select Type | Award: 1 | Penalty: 0 | Databases

From the following instance of a relation schema $R(A, B, C)$, we can conclude that: (Mark all the appropriate choices)

A	B	C
2	3	4
4	6	5
5	4	6
4	6	2
3	2	5

A. A functionally determines B and B functionally determines C.
B. A functionally determines B and B does not functionally determine C.
C. B functionally determine A and A does not functionally determine C.
D. B does not functionally determine C and C does not functionally determine A.

Your Answer: | Correct Answer: D | Not Attempted | Time taken: 00min 00sec | Discuss

Q #11 Multiple Select Type | Award: 1 | Penalty: 0 | Set Theory & Algebra

Which of the following is/are correct? (Mark all the appropriate choices)

A. If G is an abelian group of order 36, G has an element of order 3.
B. If G is an abelian group of order 308, G has an element of order 11.
C. If G is an abelian group of order 36, G has an element of order 5.
D. If G is an abelian group of order 308, G has an element of order 6.

Your Answer: | Correct Answer: A;B | Not Attempted | Time taken: 00min 00sec | Discuss

Q #12 Multiple Choice Type | Award: 1 | Penalty: 0.33 | Compiler Design

When we merge states in an $LR(1)$ parser to form an $LALR(1)$ parser, we may introduce

A. Shift-reduce conflict.
B. Reduce-reduce conflict.
C. Neither shift-reduce nor reduce-reduce conflict.
D. Both shift-reduce as well as reduce-reduce conflict.

Your Answer: | Correct Answer: B | Not Attempted | Time taken: 00min 00sec | Discuss

Q #13 | Multiple Select Type | Award: 1 | Penalty: 0 | Databases

Which of the following statements concerning database normalization is/are TRUE? (Mark all the appropriate choices)

A. A sufficient condition for a relation to be in $1NF$ but not in $2NF$ is that all its candidate keys have multiple attributes.
B. A necessary condition for a relation to be in $2NF$ but not in $3NF$ is that some non-prime attribute must be determined by a non-key.
C. A necessary condition for a relation to be in $3NF$ but not in BCNF is that it should have overlapping candidate keys.
D. A sufficient condition for a relation not to be in BCNF is a functional dependency $A \rightarrow B$ where A is not a super key.

Your Answer: | Correct Answer: B;C;D | Not Attempted | Time taken: 00min 00sec | Discuss

Q #14 | Multiple Choice Type | Award: 1 | Penalty: 0.33 | Linear Algebra

Let P be a matrix of order 3×3 whose elements are real numbers. If $P^2 = 0$, then the eigenvalues of P are _____

A. $0, 0, 0$
B. $0, 0, 1$
C. $0, 1, 1$
D. $1, 1, 1$

Your Answer: | Correct Answer: A | Not Attempted | Time taken: 00min 00sec | Discuss

Q #15 | Multiple Choice Type | Award: 1 | Penalty: 0.33 | Combinatory

In how many ways can we choose 3 numbers one after other from the set $\{1, 2, 3, 4, 5, 6, 7\}$ so that the numbers chosen are in increasing order?

A. $\binom{7}{3}$
B. $\binom{7}{3}/3!$
C. ${}^7P_3$
D. None of the above

Your Answer: | Correct Answer: A | Not Attempted | Time taken: 00min 00sec | Discuss

Q #16 | Multiple Choice Type | Award: 1 | Penalty: 0.33 | Programming in C

Consider the following C program

```
#include <stdio.h>
int main()
{
    char *str1 = "Hello In\0dia";
5.  char *str2 = "x%s";
    char *str3 = str2;
    printf(str3, str1);
    return 0;
}
```

What will be the output when the above program is executed?

A. xHello In dia
B. xHello In
C. xHello In\0dia
D. x%s

Your Answer: | Correct Answer: B | Not Attempted | Time taken: 00min 00sec | Discuss

Q #17 Multiple Select Type | Award: 1 | Penalty: 0 | Programming in C

Which of the following is/are the correct way of declaring a function in C which can accept int $a[20][4][5]$ as a parameter? (Mark all the appropriate choices)

A. `fun(int ***a)`

B. `fun(int (*a)[4][5])`

C. `fun(int a[ ][4][5])`

D. `fun3(int a[20][4][5])`

Your Answer: | Correct Answer: B;C;D | Not Attempted | Time taken: 00min 00sec | Discuss

Q #18 Multiple Choice Type | Award: 1 | Penalty: 0.33 | Mathematical Logic

Anjana, Chandani, and Pooja are three students that took the Logic exam. Let's consider a propositional language where p represents "Anjana passed the exam", q represents "Chandani passed the exam" and r represents "Pooja passed the exam".

Which of the following is the formal representation of the sentence "At least two among Anjana, Chandani and Pooja passed the exam"?

A. $p \vee q \vee r$
B. $p \wedge q \wedge r$
C. $(p \wedge q \wedge \neg r) \vee (\neg p \wedge q \wedge r) \vee (p \wedge \neg q \wedge r)$
D. None of the above

Your Answer: | Correct Answer: D | Not Attempted | Time taken: 00min 00sec | Discuss

Q #19 Multiple Choice Type | Award: 1 | Penalty: 0.33 | Set Theory & Algebra

Which of the following relations on the set $A = \{1, 2, 3, 4\}$ is reflexive?

A. $\{(2,2), (2,3), (2,4), (3,2), (3,3), (3,4)\}$
B. $\{(1,1), (1,2), (2,1), (2,2), (3,3), (4,4)\}$

C. $\{(2,4),(4,2)\}$
D. $\{(1,2),(2,3),(3,4)\}$

Your Answer: | Correct Answer: B | Not Attempted | Time taken: 00min 00sec | Discuss

Q #20 Numerical Type | Award: 1 | Penalty: 0 | Set Theory & Algebra

The number of relations on the set $S = \{0,1\}$ that contain the pair $(0,1)$ _____

Your Answer: | Correct Answer: 8 | Not Attempted | Time taken: 00min 00sec | Discuss

Q #21 Multiple Choice Type | Award: 1 | Penalty: 0.33 | Set Theory & Algebra

Consider the set $A = \{a, \{p,q\}, \{v\}\}$. $B, C \subseteq 2^A$ such that $B = \{\{a\}, \{\{v\}\}, \{a, \{v\}\}\}$. Which of the following can be C such that B and C form a valid partition of 2^A?

A. $\{\phi, a, \{p,q\}, \{\{p,q\}, \{v\}\}\}$
B. $\{\{\{p,q\}\}, \{a, \{p,q\}\}, \{a, \{v\}\}, \{\{p,q\}, \{v\}\}, \{a, \{p,q\}, \{v\}\}\}$
C. $\{\{\{p,q\}\}, \{a, \{p,q\}\}, \{\phi\}, \{\{p,q\}, \{v\}\}\}$
D. $\{\phi, \{\{p,q\}\}, \{\{p,q\}, \{v\}\}, \{a, \{p,q\}\}, \{a, \{p,q\}, \{v\}\}\}$

Your Answer: | Correct Answer: D | Not Attempted | Time taken: 00min 00sec | Discuss

Q #22 Multiple Select Type | Award: 1 | Penalty: 0 | Databases

Consider the relation $R(A,B,C,D)$, on which the following set of functional dependencies hold.

- $F : \{A \to B, B \to C, C \to D\}$
- $G : \{A \to B, B \to C, A \to D\}$

Which of the following is/are correct? (Mark all the appropriate options)

A. F covers G
B. G covers F
C. $F \equiv G$
D. $F \not\equiv G$

Your Answer: | Correct Answer: A;D | Not Attempted | Time taken: 00min 00sec | Discuss

Q #23 Multiple Choice Type | Award: 1 | Penalty: 0.33 | Combinatory

A multiple choice test is having 100 questions and 5 options per question. How many different ways can the test be completed?

A. 6^{100}
B. 100^5
C. 5^{100}
D. None of these

Your Answer: | Correct Answer: A | Not Attempted | Time taken: 00min 00sec | Discuss

Q #24 Numerical Type | Award: 1 | Penalty: 0 | Operating System

A variation of an inode is called a linode (short for little node). Assume the size of a disk block is $4K$ bytes and a disk block can contain $2K$ disk block addresses. A linode has the following structure:

- entries $0-6$ are direct disk block pointers
- entry 7 is a single indirect block pointer
- entry 8 is a double indirect block pointer

The maximum size of a file (rounded to the nearest GB) using a linode will be _____

Your Answer: | Correct Answer: 16:16.1 | Not Attempted | Time taken: 00min 00sec | Discuss

Q #25 Numerical Type | Award: 1 | Penalty: 0 | Operating System

A system uses FIFO policy for system replacement. It has 3 page frames with no pages loaded to begin with. The system first accesses 200 distinct pages in some order and then accesses the same 200 pages but now in the reverse order. The number of page faults will be _____

Your Answer: | Correct Answer: 397 | Not Attempted | Time taken: 00min 00sec | Discuss

Q #26 Numerical Type | Award: 2 | Penalty: 0 | Operating System

Consider a hard disk with 16 recording surfaces $(0-15)$ having 32768 cylinders $(0-32767)$ and each cylinder contains 32 sectors $(0-31)$. Data storage capacity in each sector is 4096 bytes. Data are organized cylinder-wise and the addressing format is $\langle \text{cylinder no., surface no., sector no.} \rangle$. A file of size 128 MB is stored in the disk and the starting disk location of the file is $\langle 1000, 2, 16 \rangle$. The cylinder number of the last sector of the file, if it is stored in a contiguous manner will be _____

Your Answer: | Correct Answer: 1064 | Not Attempted | Time taken: 00min 00sec | Discuss

Q #27 Numerical Type | Award: 2 | Penalty: 0 | Operating System

Cylinder a disk queue with requests for $\mathrm{I/O}$ to blocks on cylinders $191, 18, 11, 61, 137, 41, 2$. The C-LOOK scheduling algorithm is used. The head is initially at cylinder number 100, moving towards 0 on its servicing pass. The cylinders are numbered from 0 to 199. The total head movement (in number of cylinders) incurred while servicing these requests is _____

Your Answer: | Correct Answer: 341 | Not Attempted | Time taken: 00min 00sec | Discuss

Q #28 Multiple Choice Type | Award: 2 | Penalty: 0.67 | Combinatory

How many triangles can be formed with vertices on a 3×3 grid of squares?

A. 516
B. 548
C. 536
D. None of these

Your Answer: | Correct Answer: A | Not Attempted | Time taken: 00min 00sec | Discuss

Q #29 Numerical Type | Award: 2 | Penalty: 0 | Programming in C

Consider the following C program:

```c
#include<stdio.h>
#include<unistd.h>
#define N 8
void fun1()
{
    printf("%s", "hello");
}
int main()
{
    void fun1();
    for(int i=0; i<N; i+=2)
    {
        fork();
        fun1();
        fflush(stdout);
    }
}
```

The total number of characters printed by the above program once executed is _____

Your Answer: | Correct Answer: 150 | Not Attempted | Time taken: 00min 00sec | Discuss

Q #30 Multiple Choice Type | Award: 2 | Penalty: 0.67 | Programming in C

Consider the following C program:

```c
#include<stdio.h>
int (*foo(int (*f)(int,int))) (int, int)
{
    return f+1;
}
int fun1(int x,int y)
{
    return x+y;
}
int fun2(int x,int y)
{
    return x*y;
}
int main()
{
    int (*fun_ptr[2])(int,int);
    int x,y;
    fun_ptr[0]=fun1;
    x=fun_ptr[0](4,5);
    fun_ptr[1]=fun2;
    fun_ptr[0] = foo(fun_ptr[0]);
    y=fun_ptr[0](4,5);
    printf("%d %d",x,y);
    return 0;
}
```

What will be the output when the above program is executed?

A. $4 \quad 5$
B. $20 \quad 9$
C. $9 \quad 20$
D. None of these

Your Answer: | Correct Answer: D | Not Attempted | Time taken: 00min 00sec | Discuss

Q #31 Numerical Type | Award: 2 | Penalty: 0 | Algorithms

In a system to store a file a hash table is created for each word. The alphanumeric value is their alphabetical order. For example, alphanumeric value for a is 1. The word is placed in hash table while reading from left to right in that order using $\mod 10$ hash function. On looking the hash table of the word "ISOMER" Larry can understand p different words. If the total number of anagrams of the word "ISOMER" is n, then the value of $n - p$ is _____

Your Answer: | Correct Answer: 540 | Not Attempted | Time taken: 00min 00sec | Discuss

Q #32 Multiple Choice Type | Award: 2 | Penalty: 0.67 | Algorithms

The time complexity of the following C snippet is:

```
int gate_2020(int n)
{
    for(int i=1; i <= n; i++)
    {
        for(int j=i ; j<=i*i ; j++)
            if(j%i==0)
            {
                for(int k=0; k < j; k++)
                    printf("gate2020");
            }
    }
}
```

A. $\Theta(n^3)$
B. $\Theta(n^2)$
C. $\Theta(n^4)$
D. $\Theta(n^5)$

Your Answer: | Correct Answer: C | Not Attempted | Time taken: 00min 00sec | Discuss

Q #33 Multiple Choice Type | Award: 2 | Penalty: 0.67 | Algorithms

Suppose we are given an algorithm $'X'$ that find the median in time $\Theta(n^2)$, where n is the number of inputs. Now consider a QuickSort implementation where we first find median using the above algorithm $'X'$, then use this median as pivot. What will be the worst case time complexity of this modified QuickSort?

A. $\Theta(n^2)$
B. $\Theta(n \log n)$
C. $O(n \log n)$
D. $\Theta(n^2 \log n)$

Your Answer: | Correct Answer: A | Not Attempted | Time taken: 00min 00sec | Discuss

Q #34 Multiple Choice Type | Award: 2 | Penalty: 0.67 | Algorithms

A sorting algorithm is said to be stable if two objects with equal keys appear in the same order in sorted output as they appear in the input unsorted array.
We have a list of 2-dimensional points (a, b) where a represents 'x' coordinate and b represents 'y' coordinate: $(8,2)(8,5)(3,5)(9,6)(7,2)(7,8)$

We sort this list in descending order of 'y' coordinates. Which of the below option follow properties of stable sort?

A. $(7,8)(9,6)(3,5)(8,5)(8,2)(7,2)$
B. $(7,8)(9,6)(8,5)(3,5)(7,2)(8,2)$
C. $(9,6)(7,8)(8,5)(3,5)(8,2)(7,2)$
D. $(7,8)(9,6)(8,5)(3,5)(8,2)(7,2)$

Your Answer: | Correct Answer: D | Not Attempted | Time taken: 00min 00sec | Discuss

Q #35

Numerical Type | Award: 2 | Penalty: 0 | Algorithms

Consider the following C program:

```c
#include <stdio.h>
int foo(int A[], int n, int s)
{
    for (int i = 0; i < n - 2; i++)
        for (int j = i + 1; j < n - 1; j++)
            for (int k = j + 1; k < n; k++)
                if (A[i] + A[j] + A[k] == s)
                    return i+j+k+3;
    return 0;
}
int main()
{
    int A[] = { 6, 14, 15, 3, 1, 10, 10 };
    int n = sizeof(A) / sizeof(A[0]);
    printf("%d", foo(A, n, 24));
    return 0;
}
```

If the output of the above code is x and the time complexity of the function foo is $\Theta(n^k)$ where n is the number of elements in the array passed to it (second argument), then $x + k =$ _____

Your Answer: | Correct Answer: 11 | Not Attempted | Time taken: 00min 00sec | Discuss

Q #36

Numerical Type | Award: 2 | Penalty: 0 | Data Structures

While searching the key value 4 in a binary search tree, key values $1, 2, 3, 6, 8, 9, 10$ and 11 are traversed not necessarily in the order given. How many different orders are possible in which these key values can occur on the search path from the root to the node containing value 4?

Your Answer: | Correct Answer: 56 | Not Attempted | Time taken: 00min 00sec | Discuss

Q #37

Numerical Type | Award: 2 | Penalty: 0 | Data Structures

Consider a C function print() which takes a root of binary search tree and a positive number 'k' as arguments as given below:

```
struct node
{
    int data;
    struct node *left, *right;
};
int count = 0;
void print(struct node *root, int k)
{
    if (root!=NULL && count < k)
    {
        print(root -> right, k);
        count++;
        if(count == k)
            printf("%d", root -> data);
        print(root -> left, k);
    }
}
```

What is the sum of all the values output by print(root, 2), where root represents root of the following Binary Search Tree? (You can assume the binary search tree to be terminated properly by NULLs)

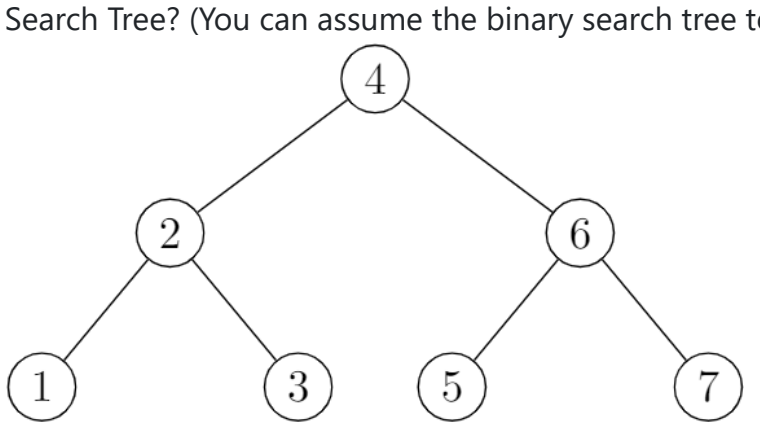

Your Answer: | Correct Answer: 6 | Not Attempted | Time taken: 00min 00sec | Discuss

Q #38 Numerical Type | Award: 2 | Penalty: 0 | Computer Networks

Stations X and Y are connected through a line of bandwidth 128 kbps. Station X uses 32 byte packets to transmit messages to Y using a sliding window protocol. The propagation delay between X and Y is 60 milliseconds. What should be the minimum window size X should use to maximize the line utilization? Assume that the acknowledgement frame is of negligible size and processing delay may be ignored.

Your Answer: | Correct Answer: 61 | Not Attempted | Time taken: 00min 00sec | Discuss

Q #39 Multiple Select Type | Award: 2 | Penalty: 0 | Databases

Consider the following SQL query over the Staff, Branch relations given below with Primary Keys being underlined:

- Staff:$\underline{\text{ID}}$, Name, position, branchNo
- Branch:$\underline{\text{branchNo}}$, Name, city

```
SELECT s.Name,b.Name
FROM Staff s, Branch b
WHERE s.branchNo = b.branchNo AND
(s.position = 'Manager' AND b.city = 'New Delhi');
```

Which of the following queries give the same result as the above SQL query? (Mark all the appropriate choices)

A. $\pi_{\text{Staff.Name,Branch.Name}}(\sigma_{(\text{position} = \text{'Manager'}) \wedge (\text{city} = \text{'New Delhi'}) \wedge (\text{Staff.branchNo}=\text{Branch.branchNo})}$ $(\text{Staff} \times \text{Branch}))$

B. $\pi_{\text{Staff.Name,Branch.Name}}(\sigma_{(\text{position} = \text{'Manager'}) \wedge (\text{city} = \text{'New Delhi'})}$ $(\text{Staff} \bowtie_{\text{Staff.branchNo}=\text{Branch.branchNo}} \text{Branch}))$

C.
```
SELECT s.Name,b.Name
FROM Staff s JOIN Branch b
on s.branchNo = b.branchNo
WHERE
(s.position = 'Manager' AND b.city = 'New Delhi');
```

D.
```
SELECT s.Name,b.Name
FROM Staff s JOIN Branch b
on s.branchNo = b.branchNo
AND
(s.position = 'Manager' AND b.city = 'New Delhi');
```

Your Answer: | Correct Answer: C;D | Not Attempted | Time taken: 00min 00sec | Discuss

Q #40 Numerical Type | Award: 2 | Penalty: 0 | CO & Architecture

Consider the C code fragment given below:

```
#define N 1000
double a[N][N], d=0;
....
for (j = 0; j < N; j++)
    for (i = 0; i < N; i++)
        d += a[i][j];
```

The elements of a are 8 bytes each. Assume that a matrix is not in cache at the beginning of the loop given variable d is in a register and starting addresses of a is at cache line boundary. Suppose the compiler does an loop interchange optimization to interchange the i and j loops without any other code change in the loop as follows.

```
#define N 1000
int a[N][N], d=0;
....
for (i = 0; i < N; i++)
    for (j = 0; j < N; j++)
        d += a[i][j];
```

Determine the percentage reduction in cache misses assuming an 8 KB direct-mapped data cache with 64-byte blocks. (Up to one decimal place)

Your Answer: | Correct Answer: 87.5:87.51 | Not Attempted | Time taken: 00min 00sec | Discuss

Q #41 Multiple Select Type | Award: 2 | Penalty: 0 | Theory of Computation

Consider the following minimal state finite automata:

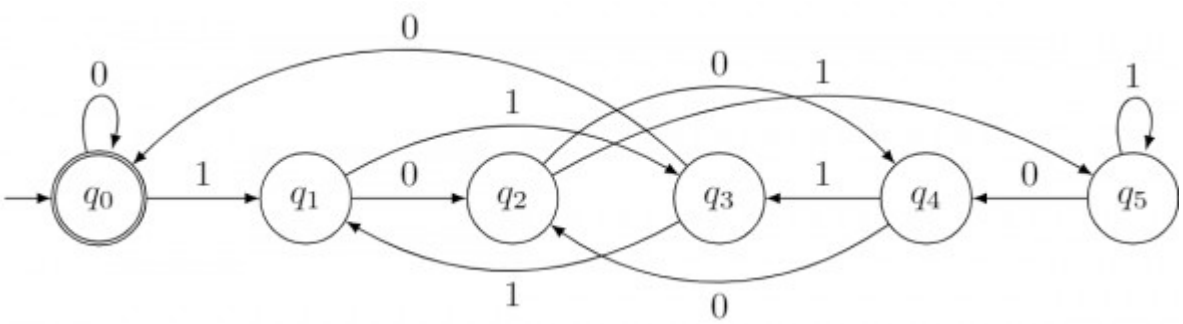

Which of the following binary strings is/are accepted by the given automata?

A. 10010
B. 100010001
C. 111010101
D. 10010000

Your Answer: | Correct Answer: A;D | Not Attempted | Time taken: 00min 00sec | Discuss

Q #42 Multiple Choice Type | Award: 2 | Penalty: 0.67 | Theory of Computation

The following pushdown automata (PDA) recognizes the language $L = \{wcw^R \mid w \in \{a,b\}^*\}$ (w_R being the reverse of w) and is accepting by empty stack (denoted by ε in the transitions). Which of the following describes the missing set of transitions from the given PDA?

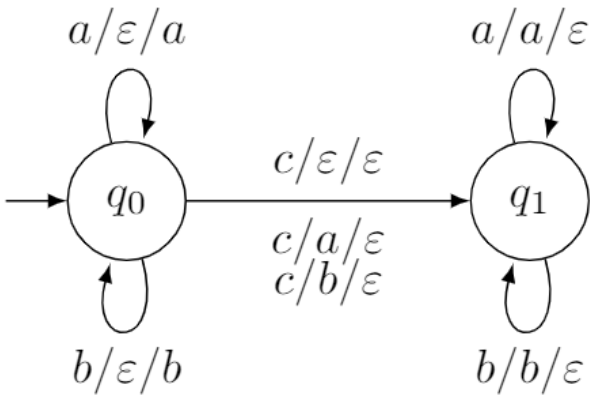

A. $\langle q_0, (a,a,a)\rangle$
$\langle q_0, (b,b,b)\rangle$
$\langle q_1, (a,a,\varepsilon)\rangle$
$\langle q_1, (b,b,\varepsilon)\rangle$

B. $\langle q_0, (a,b,a)\rangle$
$\langle q_0, (b,a,b)\rangle$
$\langle q_1, (a,a,\varepsilon)\rangle$
$\langle q_1, (b,b,\varepsilon)\rangle$

C. $\langle q_0, (a,a,a)\rangle$
$\langle q_0, (b,b,b)\rangle$
$\langle q_0, (a,b,a)\rangle$
$\langle q_0, (b,a,b)\rangle$
$\langle q_1, (a,a,\varepsilon)\rangle$
$\langle q_1, (b,b,\varepsilon)\rangle$

D. $\langle q_0, (a,a,a)\rangle$
$\langle q_0, (b,b,b)\rangle$
$\langle q_0, (a,b,a)\rangle$
$\langle q_0, (b,a,b)\rangle$
$\langle q_1, (a,a,\varepsilon)\rangle$
$\langle q_1, (b,b,\varepsilon)\rangle$
$\langle q_1, (a,b,\varepsilon)\rangle$
$\langle q_1, (b,a,\varepsilon)\rangle$

Your Answer: | Correct Answer: C | Not Attempted | Time taken: 00min 00sec | Discuss

Q #43 Multiple Choice Type | Award: 2 | Penalty: 0.67 | Digital Logic

A logic circuit implements the following Boolean function:
$F = ABC + AC'D'$
It is found that the circuit input combination $A = D = 1$ can never occur. The simplified expression for F using the proper don't-care conditions is

A. $F = AC' + AB$
B. $F = BC$
C. $F = BC + C'$
D. $F = A'B + CD'$

Your Answer: | Correct Answer: A | Not Attempted | Time taken: 00min 00sec | Discuss

Q #44 Multiple Select Type | Award: 2 | Penalty: 0 | Digital Logic

The implicants being chosen for a circuit implementation are marked in the following four Karnaugh-maps all representing the same function f. In which of them, a static-1 hazard is possible? (Mark all the appropriate choices)

A.

wx \ yz	00	01	11	10
00	0	0	1	0
01	0	1	1	0
11	0	1	1	0
10	0	0	1	0

B.

wx \ yz	00	01	11	10
00	0	0	1	0
01	0	1	1	0
11	0	1	1	0
10	0	0	1	0

C.

wx \ yz	00	01	11	10
00	0	0	1	0
01	0	1	1	0
11	0	1	1	0
10	0	0	1	0

D.

wx \ yz	00	01	11	10
00	0	0	1	0
01	0	1	1	0
11	0	1	1	0
10	0	0	1	0

Your Answer: | Correct Answer: A;B;C | Not Attempted | Time taken: 00min 00sec | Discuss

Q #45 Multiple Select Type | Award: 2 | Penalty: 0 | Theory of Computation

Which of the following languages is/are not recursively enumerable? Here, $\langle M \rangle$ denotes an encoding of Turing machine M. (Mark all the appropriate choices)

A. $L = \{\langle M \rangle \mid L(M) \text{ is empty}\}$
B. $L = \{\langle M \rangle \mid L(M) \text{ has exactly one string}\}$
C. $L = \{\langle M \rangle \mid L(M) \text{ has at least 2021 strings}\}$
D. $L = \{\langle M \rangle \mid L(M) \text{ has at most 2021 strings}\}$

Your Answer: | Correct Answer: A;B;D | Not Attempted | Time taken: 00min 00sec | Discuss

Q #46 Numerical Type | Award: 2 | Penalty: 0 | Computer Networks

A channel has a bit rate of 72 kbps and one-way propagation delay of 36 milliseconds. The channel uses stop and wait protocol and the transmission time of the acknowledgement frame is negligible. To get a channel efficiency of at least 85%, the minimum frame size in bytes should be _____

Your Answer: | Correct Answer: 3672:3673 | Not Attempted | Time taken: 00min 00sec | Discuss

Q #47 Numerical Type | Award: 2 | Penalty: 0 | Computer Networks

A slotted ALOHA network transmits 250-bit frames using a shared channel with a 750 kbps bandwidth. The throughput (in frames per second) if the system (all stations together) produces 180 frames per second(round off to 2 decimal places) will be _____

Your Answer: | Correct Answer: 10.1:10.2 | Not Attempted | Time taken: 00min 00sec | Discuss

Q #48 Multiple Select Type | Award: 2 | Penalty: 0 | Mathematical Logic

Several friends are planning a road trip. If Biden goes on the road trip, then Neilia goes on the road trip. If Neilia does not go on the road trip, then Trump does not go on the road trip. Which of the following statements must be TRUE? (Mark all the appropriate choices)

A. If Trump goes on the road trip, then Biden goes on the road trip.
B. Biden does not go on the road trip, if Neilia does not go on the road trip.
C. If Trump goes on the road trip, then Neilia goes on the road trip.
D. If Biden goes on the road trip, then Trump goes on the road trip.

Your Answer: | Correct Answer: B;C | Not Attempted | Time taken: 00min 00sec | Discuss

Q #49 Numerical Type | Award: 2 | Penalty: 0 | Probability

Suppose that you model the time between arrival of emails in your inbox as an exponentially distributed random variable with mean 21 minutes. You get an email at $9:00$ am and then check your email at $9:21$ am. Unfortunately, you have not received another email since. Knowing this, what is the expected value of the number of minutes after $9:21$ am at which the next email will arrive?

Your Answer: | Correct Answer: 21 | Not Attempted | Time taken: 00min 00sec | Discuss

Q #50 Multiple Choice Type | Award: 2 | Penalty: 0.67 | Digital Logic

In the sequential circuit shown below, if the initial value of the output $Q_0Q_1Q_2$ is 111, what are the next five values of Q_2?

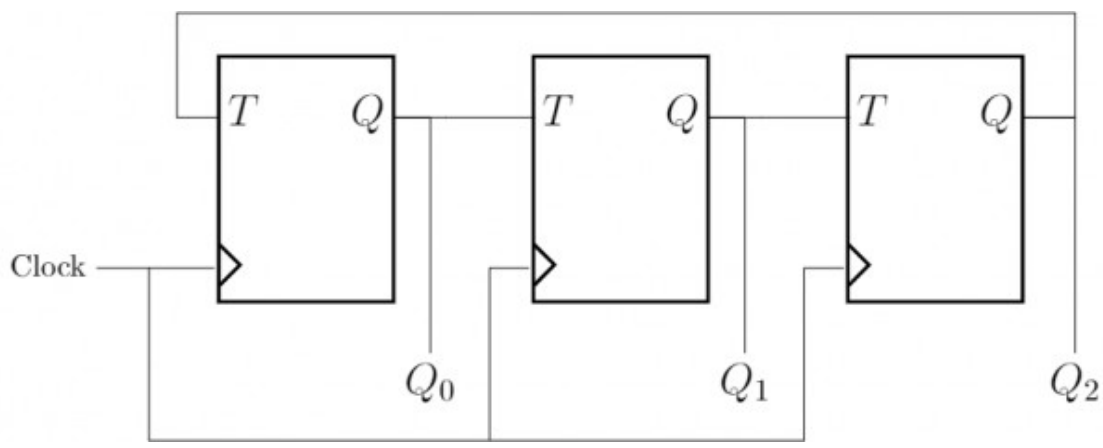

A. $1, 0, 0, 0, 1$

B. $1, 1, 0, 1, 1$
C. $1, 0, 1, 0, 1$
D. $0, 0, 0, 0, 0$

Your Answer: | Correct Answer: D | Not Attempted | Time taken: 00min 00sec | Discuss

Q #51 Numerical Type | Award: 2 | Penalty: 0 | Digital Logic

The function $f(a, b, c, d) = \Sigma_m(4, 5, 6, 12, 14) + \Sigma_d(2, 8, 13, 15)$. If we implement function f, using only NAND gates, let the minimum number of gates required required be α. Similarly, if we implement the function f using only NOR gates, let the minimum number of gates required be β. The value of $\alpha + \beta =$ _____ (Assume both primed and unprimed variables are available, and fan-in of the gates is two)

Your Answer: | Correct Answer: 5 | Not Attempted | Time taken: 00min 00sec | Discuss

Q #52 Multiple Select Type | Award: 2 | Penalty: 0 | Compiler Design

Which of the following is/are CORRECT? (Mark all the appropriate choices)

A. The loop invariant code motion transformation always results in a faster executing code.
B. During the high level control/dataflow graph (CDFG) transformations, constant folding may lead to opportunities for dead code elimination.
C. Constant folding transformation always results in same or lower number of generated instructions, independent of the target hardware resources.
D. The dead code elimination transformation may sometimes result in a larger control/dataflow graph (CDFG).

Your Answer: | Correct Answer: B;C | Not Attempted | Time taken: 00min 00sec | Discuss

Q #53 Multiple Choice Type | Award: 2 | Penalty: 0.67 | Combinatory

Which one of the following is a closed form expression for the generating function of the sequence $\{a_n\}$ where $a_n = 2$ for $n = 3, 4, 5, \ldots$ and $a_0 = a_1 = a_2 = 0$?

A. $\frac{2x^2}{(1-x)}$
B. $\frac{2}{(1-x)}$
C. $\frac{2x^3}{(1-x)}$
D. None of these

Your Answer: | Correct Answer: C | Not Attempted | Time taken: 00min 00sec | Discuss

Q #54 Numerical Type | Award: 2 | Penalty: 0 | Probability

In the city of Rebuke birth rate is uniform for all months except September where the number of births is double the normal. Also, 3 girl children are born in September for every 2 boy children where as the ratio is the same for every other month. Given then Kavya (assume female gender) is born in Rebuke what is the probability that her birthday is in September? (up to 3 decimal places)

Your Answer: | Correct Answer: 0.179:0.180 | Not Attempted | Time taken: 00min 00sec | Discuss

Q #55 | Numerical Type | Award: 2 | Penalty: 0 | Operating System

Consider a system with logical address space of 44 bits, physical address space of 32 bits, byte addressable memory and page table entry of 4 bytes. The operating system uses 2 level paging for logical to physical address translation and page tables at all levels occupy the same size as a page. If a process is taking maximum $4GB$ of memory, the number of second level page tables required for this process will be _____

Your Answer: | Correct Answer: 4 | Not Attempted | Time taken: 00min 00sec | Discuss

Copyright & Stuff